NOTRE DAME UNIVERSITY BANGLADESH

Digital System Design Lab Task-02

Course Code: CSE-4106
Course Title: Digital System Design Lab
Lab Task Topic: Design Random Sequence Counter

Submitted by:

Name: Istiak Alam
ID: 0692230005101005
Batch: CSE-20

Submission Date: October 12, 2025

Submitted to:

Afsana Sharmin Shanta
Lecturer,
Notre Dame University Bangladesh

Implementation in Proteus
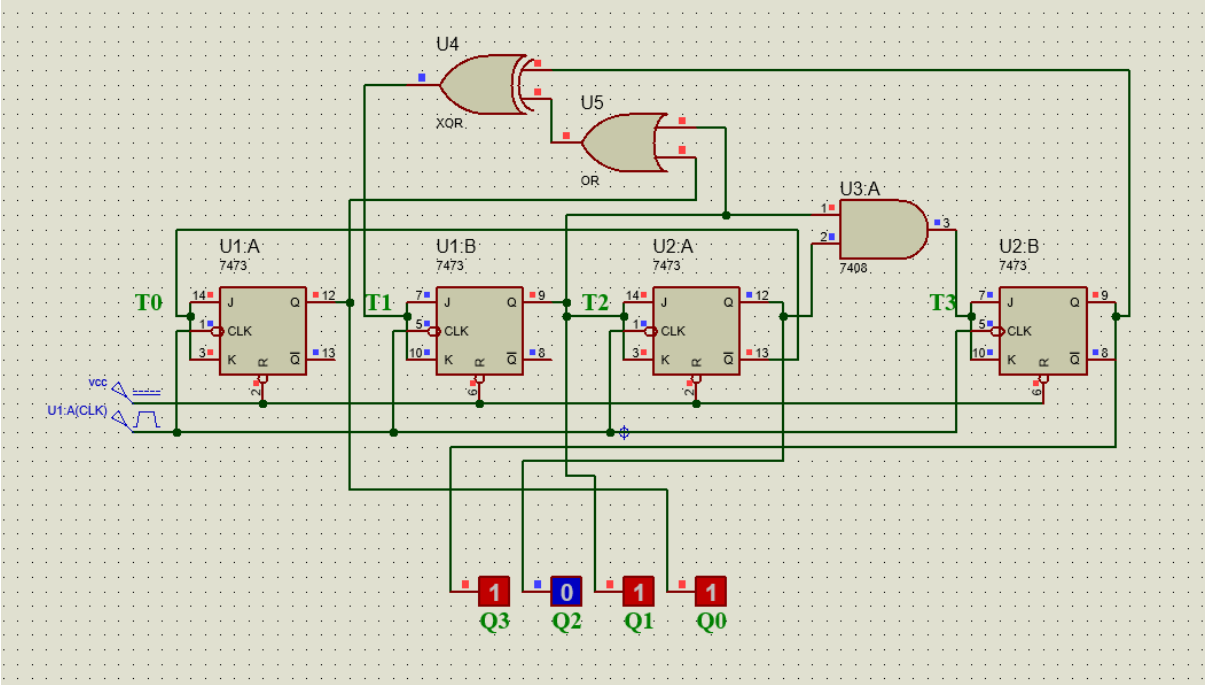
Circuit Diagram :